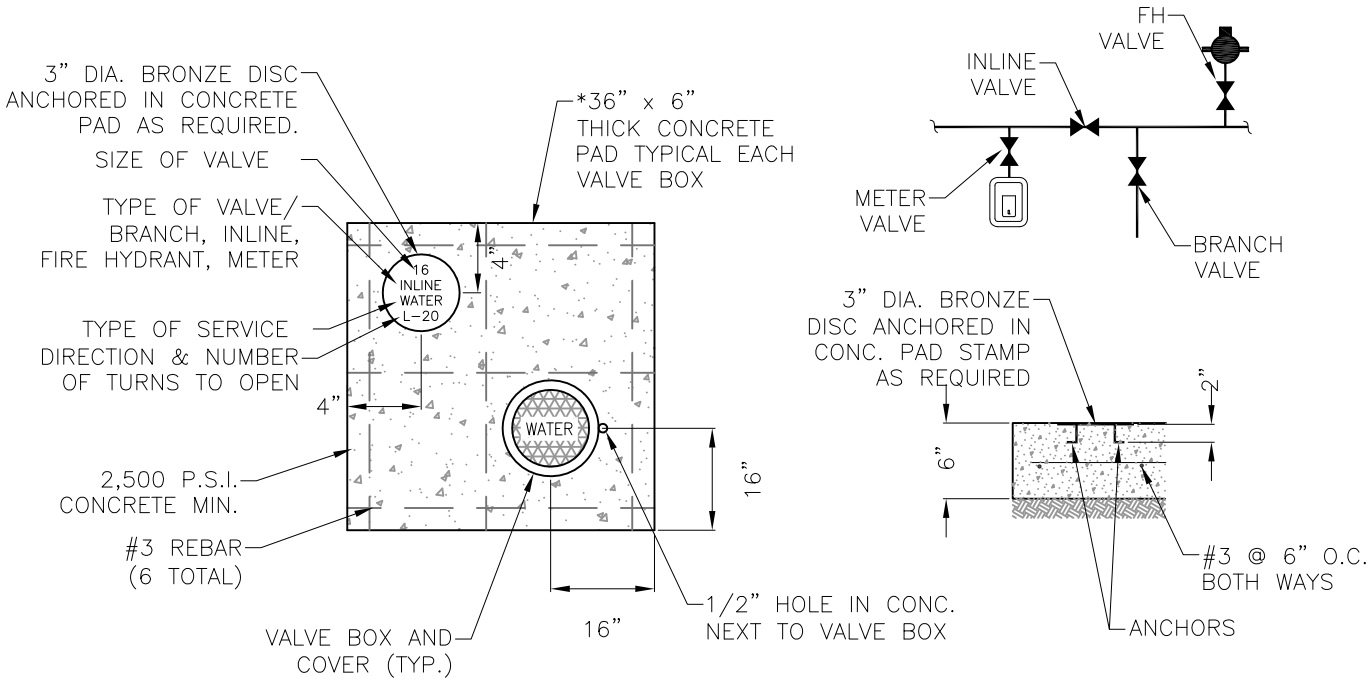

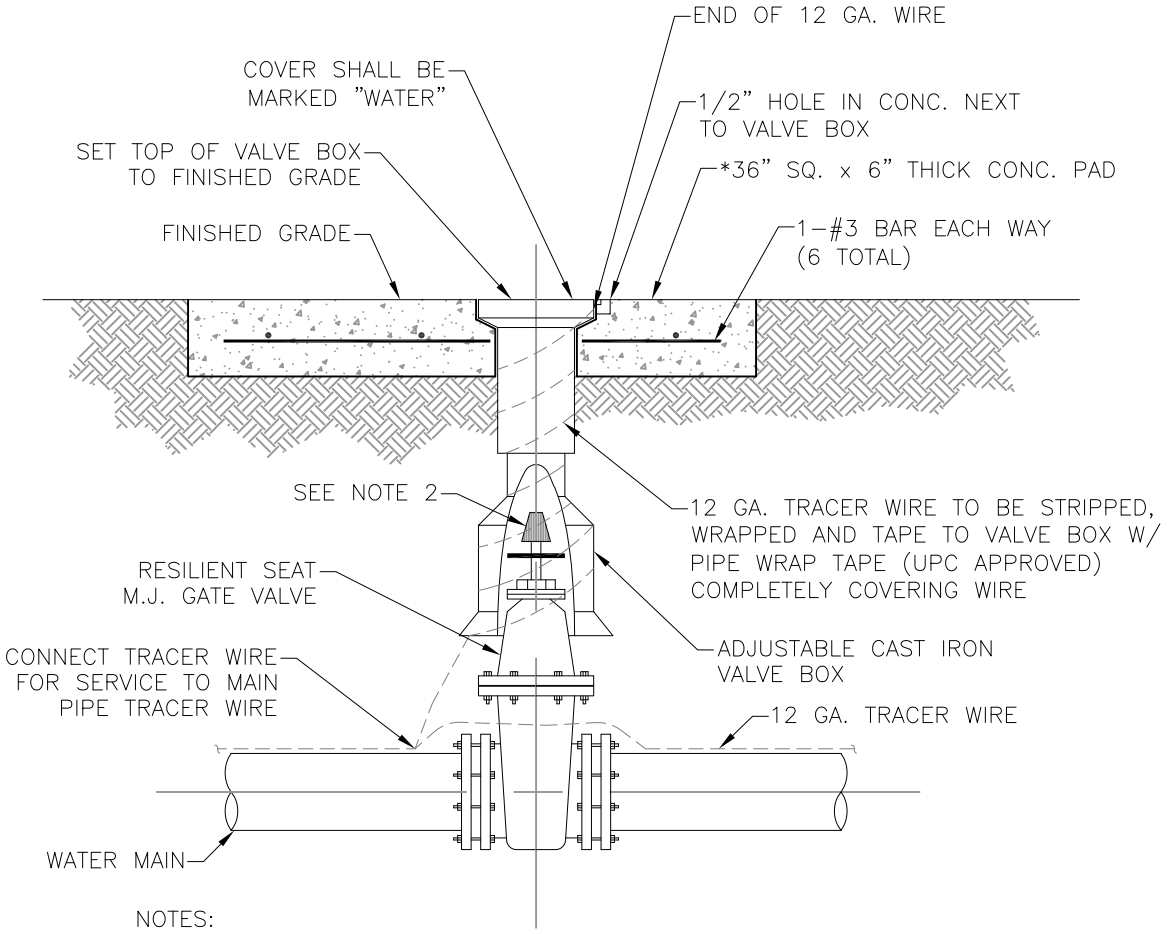

NOTES:

1.) PVC EXTENSIONS SHALL NOT BE USED ON VALVE BOX INSTALLATION.

2.) THE ACTUATING NUT FOR DEEPER VALVES SHALL BE EXTENDED TO COME UP TO 4 FOOT DEPTH BELOW FINISHED GRADE.

*NOTE: 24" SQ. PAD TO BE CONSTRUCTED INSIDE RESIDENTIAL AREAS.

CITY OF P.C.B.
UTILITIES DEPARTMENT

REV.	DATE
1	MAR '12

.....
DATE OF APPROVAL

GATE VALVE DETAIL
4" TO 16"

W-1

I:\CAD\AutoCad Files\0-UTILITIES DEPARTMENT\UTILITY MAPS\DETAILS_PCB-MOST CURRENT\0-DWG\0-NEW-PCB-UTL-DETAILS-1.dwg, 2012 UTIL BASE MAP.ctb