CITY OF P.C.B.
UTILITIES DEPARTMENT

REV.	DATE
1	MAR '12

DATE OF APPROVAL

4" AND 6" WATER METER & BACK FLOW ASSEMBLY DETAIL

W-9A

NOTE:

1. METER WILL BE PROVIDED BY THE CITY, AND INSTALLED BY CONTRACTOR.
2. ALL ABOVE GROUND PIPE AND FITTINGS SHALL BE FLANGED DUCTILE IRON.
3. ALL ITEMS ABOVE GRADE SHALL HAVE TWO COATS OF APPROVED EPOXY BLUE ENAMEL PAINT.
4. ALL VALVES SHALL HAVE HANDWHEELS.
5. VALVE(S) SHALL BE CHAINED AND PADLOCKED IN OPENED POSITION.
6. BACK FLOW DEVICE SHALL BE RPZ OR DC TYPE AS APPROVED BY CITY.

* 7. REDUCER AS REQUIRED IF METER SIZE DIFFERS FROM PIPE SIZE.

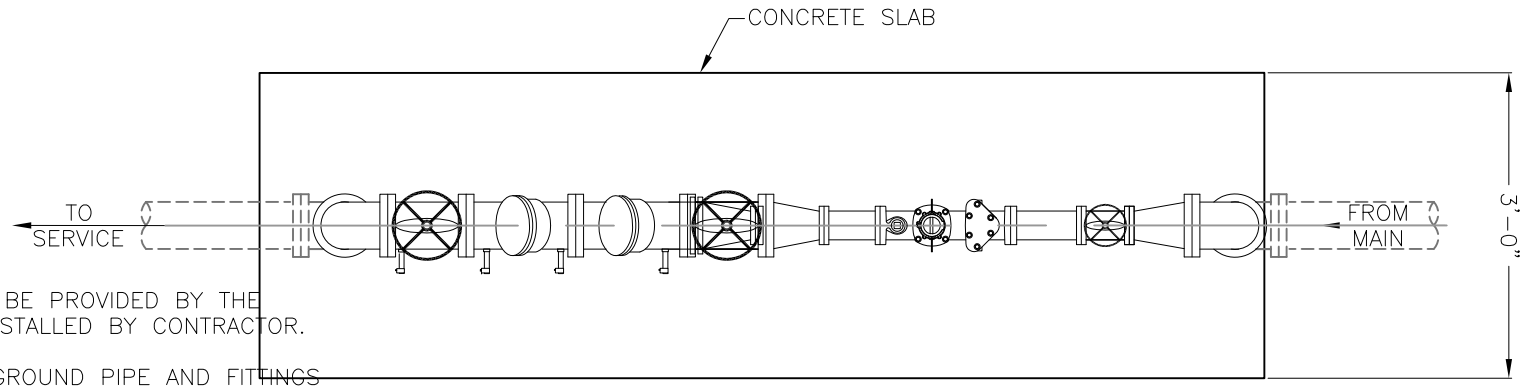

PLAN VIEW

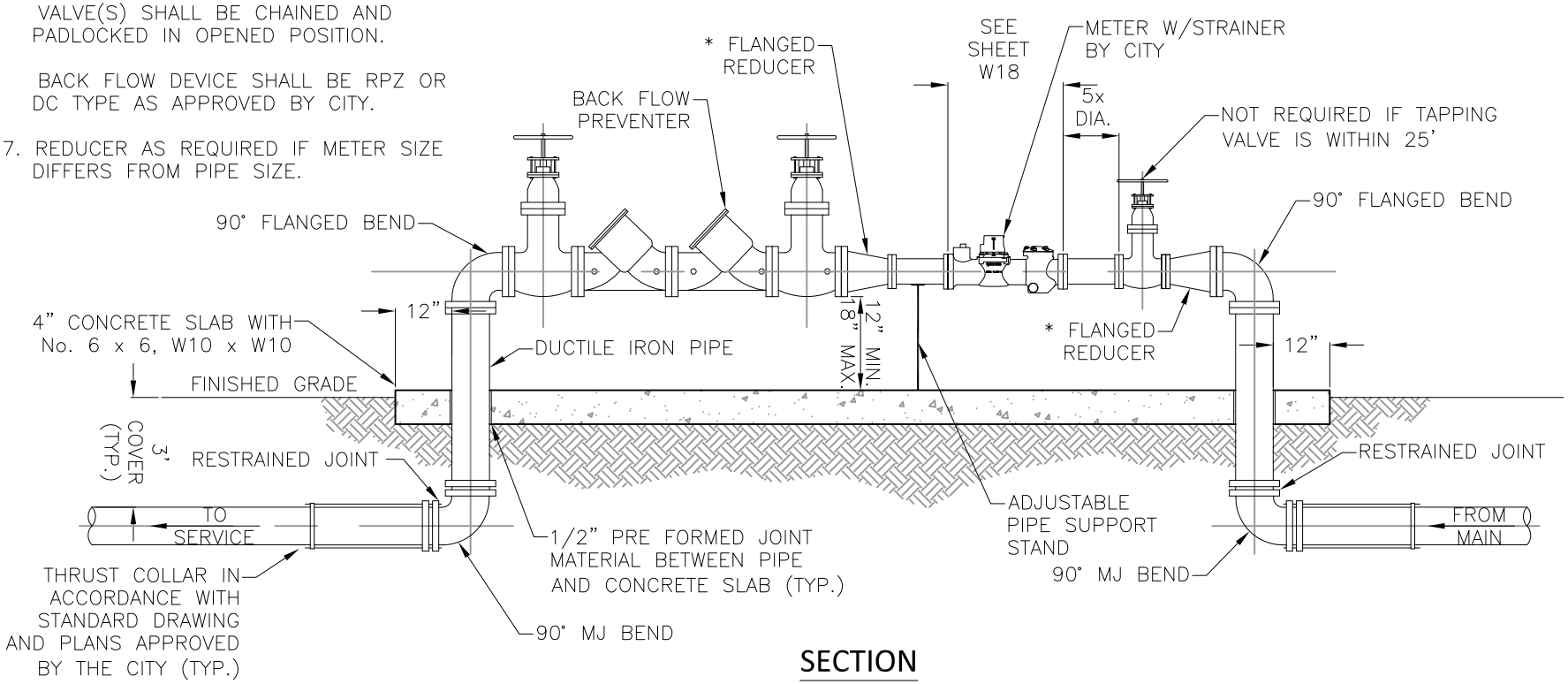

SECTION