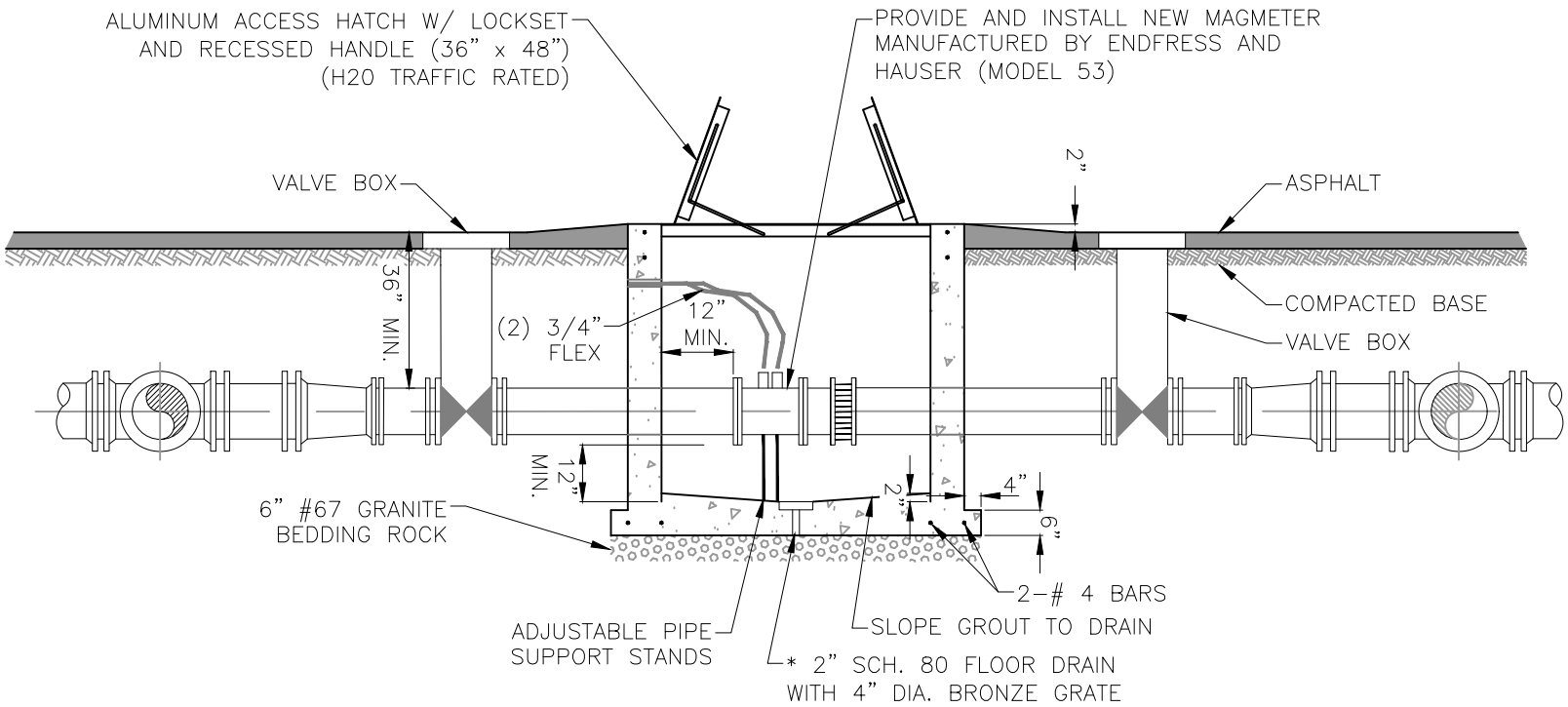

SECTION "A-A"

* AREAS W/ HIGH WATER TABLE SHALL HAVE SUMP PUMP IN LIEU OF DRAIN

CITY OF P.C.B.
UTILITIES DEPARTMENT

REV.	DATE
1	MAR '12

DATE OF APPROVAL

SEWER FLOW METER SECTION

S-17B