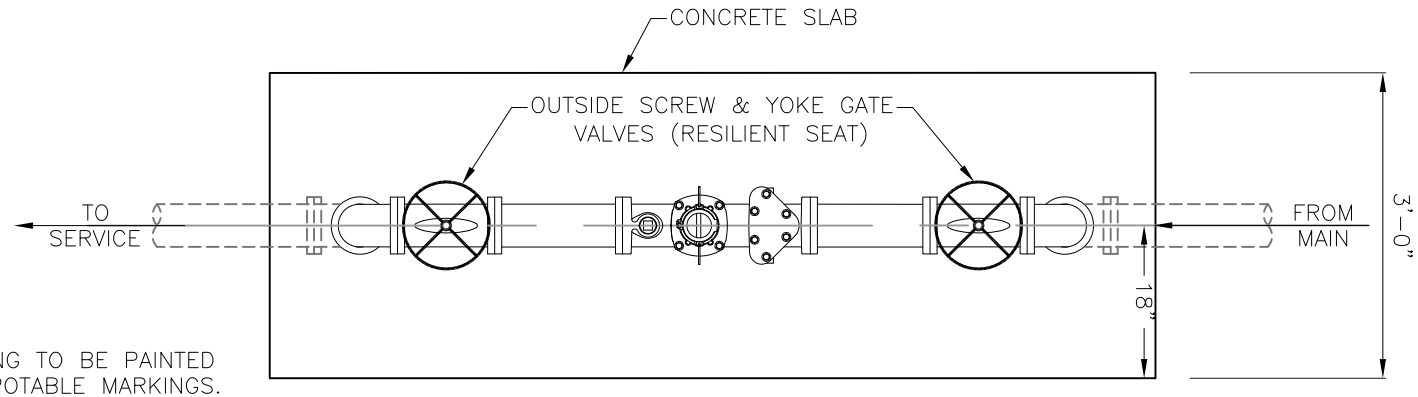

PLAN VIEW

NOTES:

1.) ABOVE GROUND PIPING TO BE PAINTED PURPLE WITH NON-POTABLE MARKINGS.

2.) DEVICES MUST BE INSTALLED LEVEL.

3.) ALL JOINTS SHALL BE FLANGED UNLESS OTHERWISE NOTED.

4.) BACK FLOW PREVENTER ONLY IF REQUIRED TO PREVENT CONTAMINATION BY ATTACHED CHEMICAL/FERTILIZER INJECTION METHODS.

5.) ALL EXPOSED CONCRETE EDGES SHALL HAVE 1/2" CHAMFER.

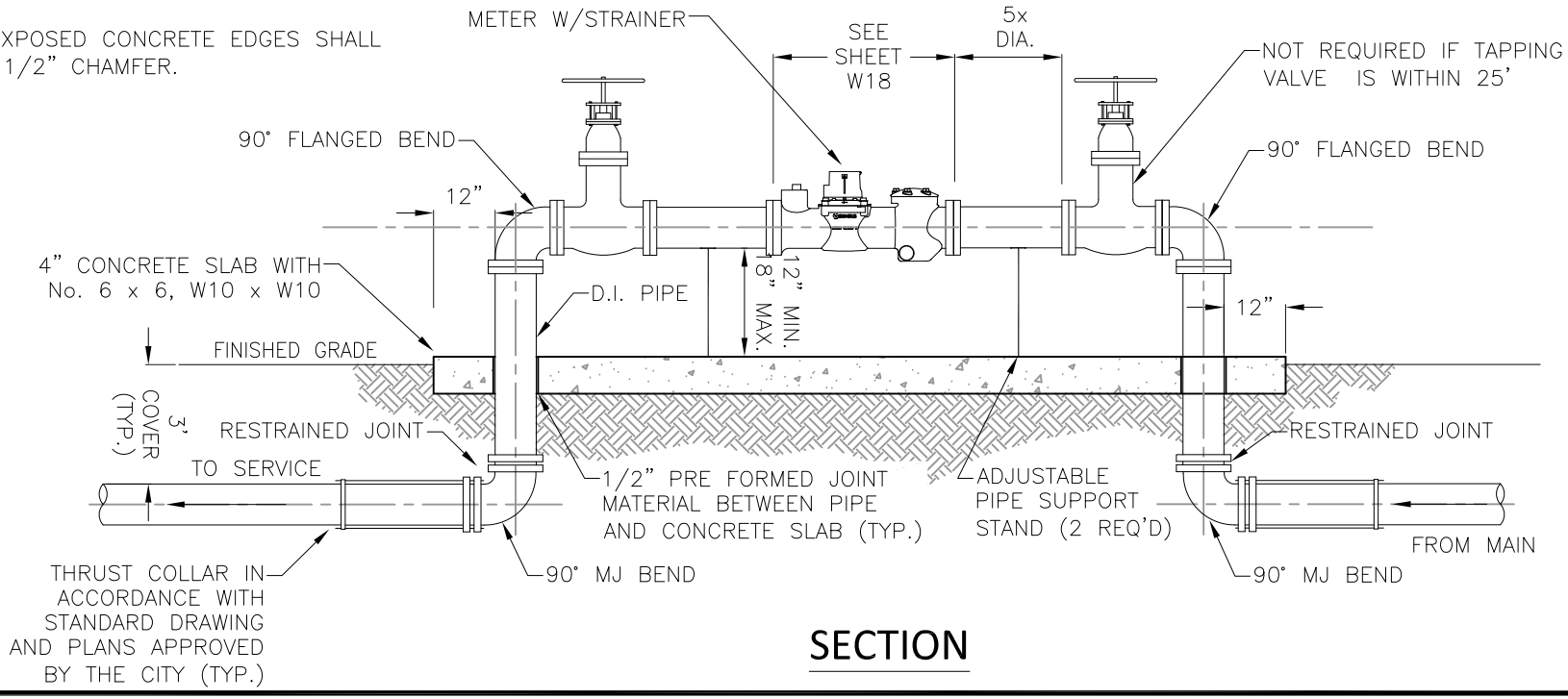

SECTION

CITY OF P.C.B.
UTILITIES DEPARTMENT

REV.	DATE
1	MAR '12

DATE OF APPROVAL

4" AND LARGER RECLAIMED METER DETAIL

R-9