NOTES:

1.) ALL FITTINGS SHALL BE BRASS WITH COMPRESSION/PACK JOINT TYPE CONNECTIONS.

2.) NO SERVICE LINE SHALL TERMINATE UNDER A DRIVEWAY.

3.) EACH SERVICE SHALL TERMINATE AT A BALL VALVE WHICH SHALL BE FASTENED TO A 1" x 4" x 30" STAKE PAINTED WHITE.

4.) CURB STOP SHALL BE A 2" FORD BALL METER VALVE B14-777W OR CITY APPROVED EQUAL.

5.) ALL SERVICE TAPS TO BE LOCATED IN FIELD. TAPS SHALL BE NO CLOSER THAN AND WILL NOT BE SET IN DRAINAGE SWALES, EASEMENTS OR SIDEWALKS.

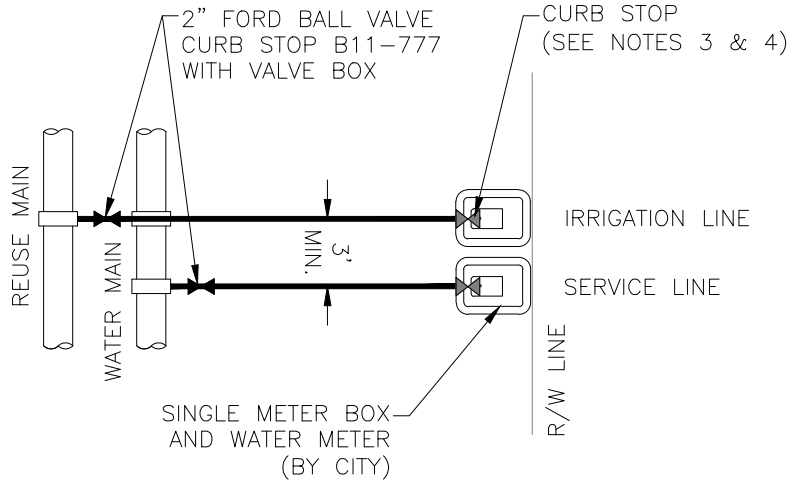

TYPICAL CITY SERVICE

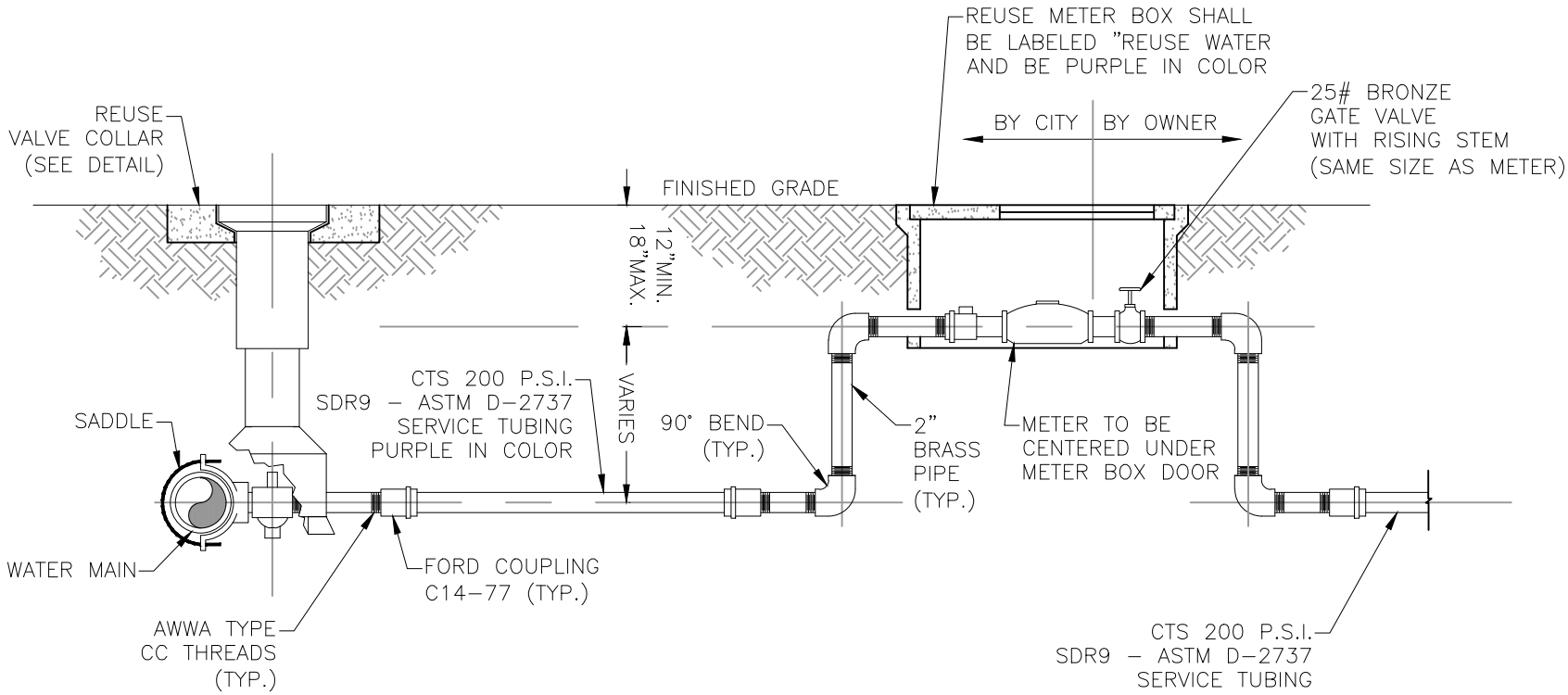

CITY OF P.C.B.
UTILITIES DEPARTMENT

REV.	DATE
1	MAR '12

DATE OF APPROVAL

1-1/2" & 2" RECLAIMED WATER METER DETAILS

R-6