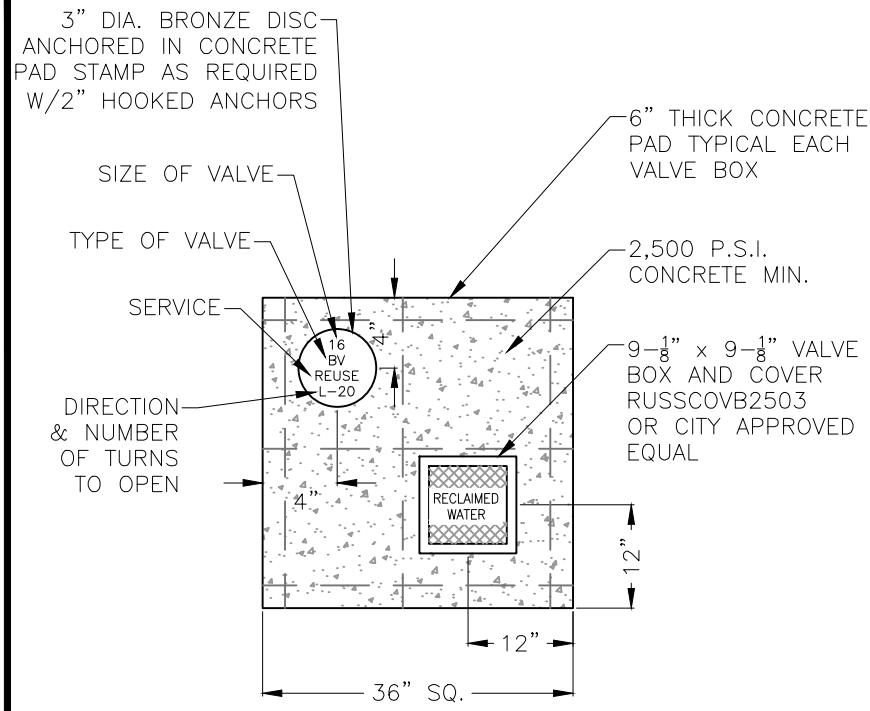

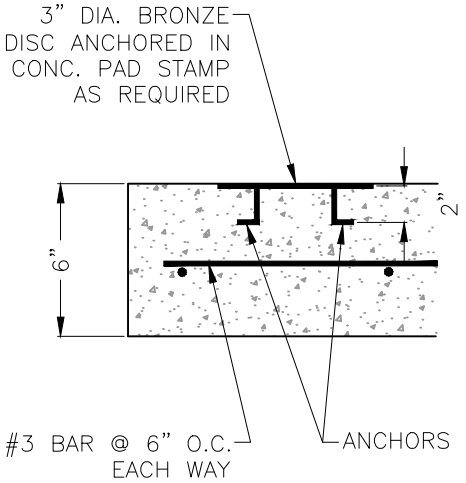

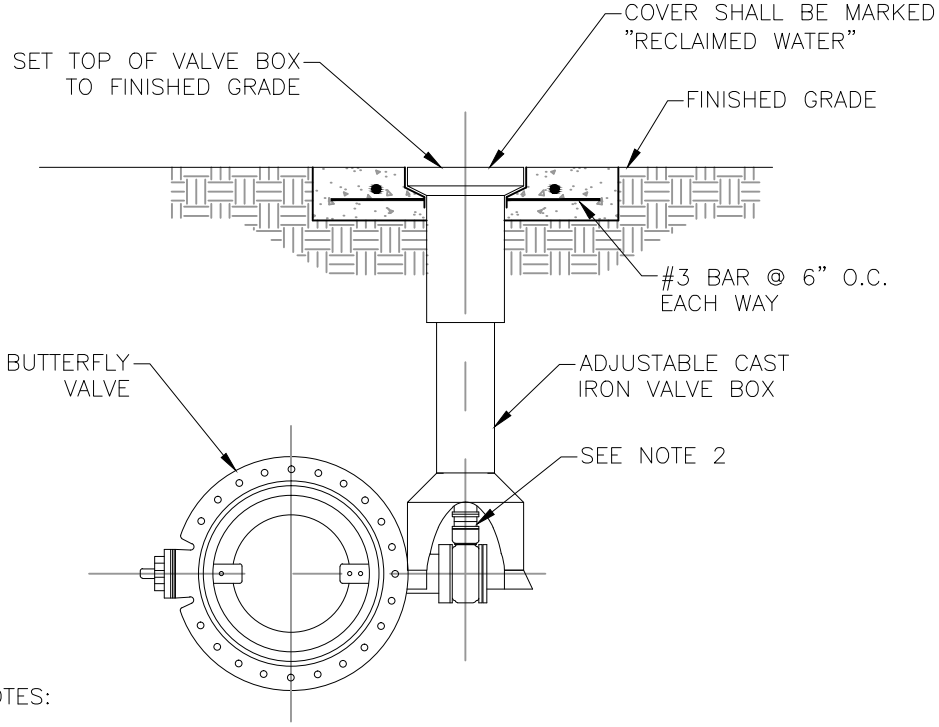

NOTES:

1.) PVC EXTENSIONS SHALL NOT BE USED ON VALVE BOX INSTALLATION.

2.) THE ACTUATING NUT FOR DEEPER VALVES SHALL BE EXTENDED TO COME UP TO 4 FOOT DEPTH BELOW FINISHED GRADE.

3.) ALL EXISTING AND PROPOSED VALVE BOXES SHALL BE ADJUSTED TO FINISHED GRADES AS ESTABLISHED IN THE FIELD.

4.) VALVES SHALL NOT BE PLACED IN HANDICAPPED RAMPS.

5.) ALL EXPOSED EDGES OF CONCRETE PAD SHALL BE CHAMFERED 1/2".

CITY OF P.C.B. UTILITIES DEPARTMENT			BUTTERFLY VALVE 16" & LARGER	R-2
REV.	DATE			
1	MAR '12	..... DATE OF APPROVAL		

I:\CAD\AutoCad Files\0-UTILITIES DEPARTMENT\UTILITY MAPS\DETAILS_PCB-MOST CURRENT\0-DWG\0-NEW-PCB-UTL-DETAILS-1.dwg, 6/11/2014 1:43:50 PM, 24x36monoserv.ctb