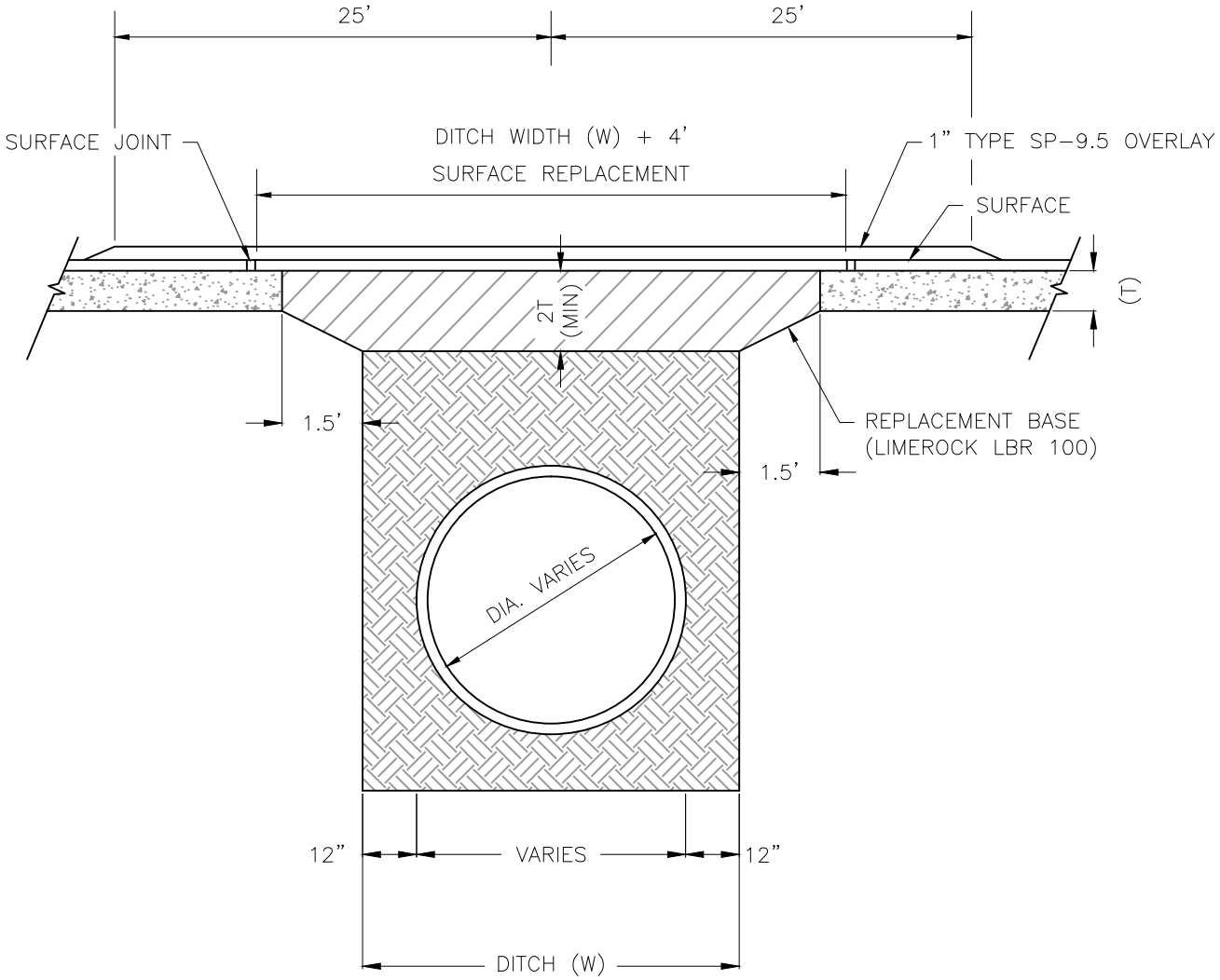

GENERAL NOTES:

1.) REPLACEMENT BASE OVER DITCH SHALL BE TWICE THE THICKNESS OF THE ORIGINAL BASE, BUT NOT LESS THAN 8" THICK.

2.) BASE MATERIAL SHALL BE COMPACTED TO A DENSITY NOT LESS THAN 98% OF THE MAXIMUM DENSITY AS DETERMINED BY AASHTO T-180.

3.) ASPHALT CONC. PAVEMENT JOINTS SHALL BE MECHANICALLY SAWED

4.) SURFACE TREATED PAVEMENT JOINTS SHALL BE LAPPED AND FEATHERED.

5.) SURFACE PATCH MATERIAL SHALL BE FDOT 12.5 AND MATCH EXISTING ASPHALT THICKNESS, BUT NOT LESS THAN 1-1/2" THICK.

CITY OF P.C.B.
UTILITIES DEPARTMENT

REV.	DATE
1	MAR '12

.....
DATE OF APPROVAL

ASPHALT PAVEMENT PATCH DETAIL

M-8

I:\CAD\AutoCad Files\0-UTILITIES DEPARTMENT\UTILITY MAPS\DETAILS_PCB-MOST CURRENT\0-DWG\0-NEW-PCB-UTL-DETAILS-1.dwg, 6/11/2014 3:46:45 PM, 24x36monoserv.ctb