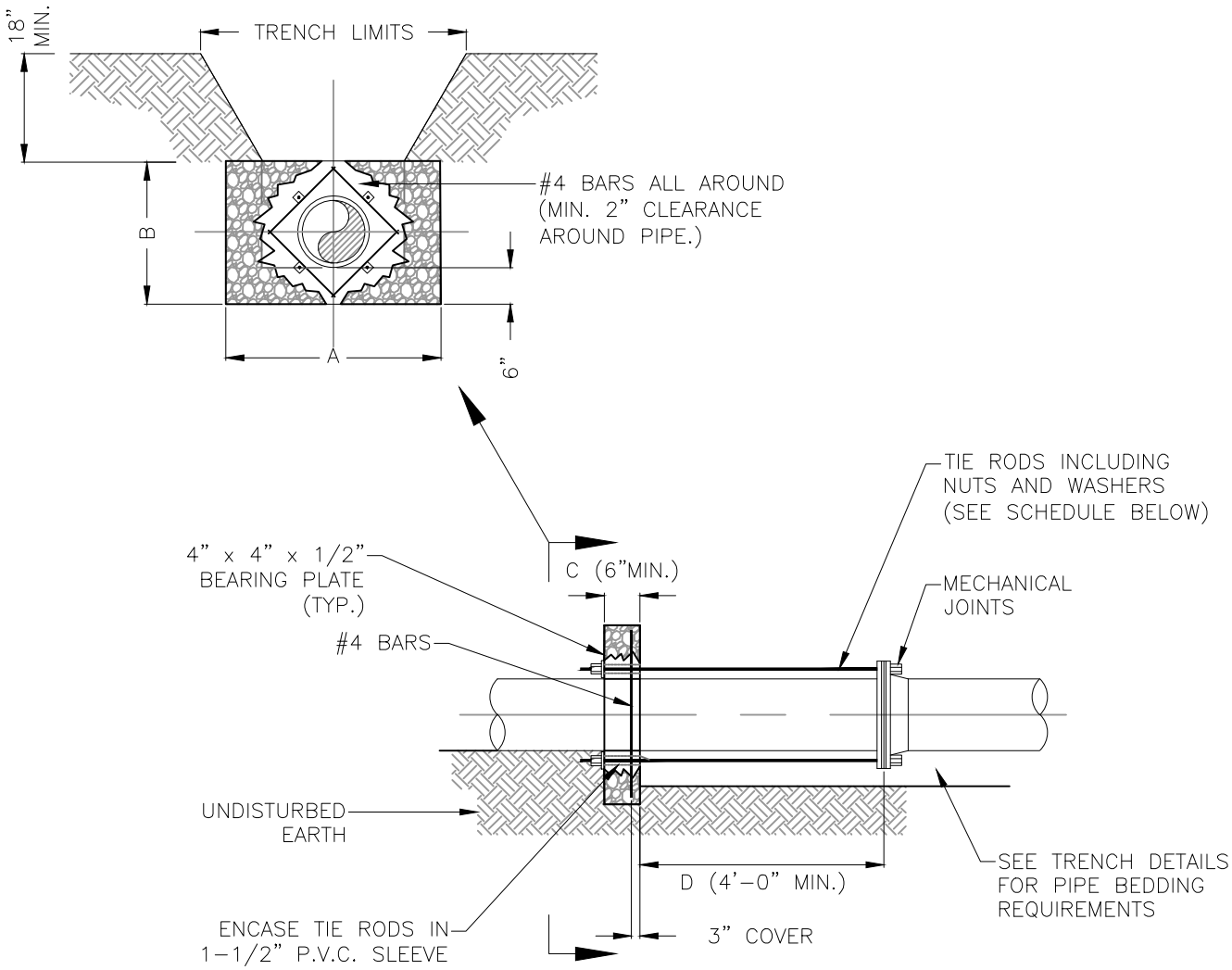

NOTES:

1.) ADDITIONAL REINFORCEMENT SHALL BE AS SPECIFIED BY THE ENGINEER.

2.) MINIMUM COMPRESSIVE STRENGTH FOR CONCRETE SHALL BE 2500 PSI.

3.) ALL FORM BOARDS SHALL BE REMOVED PRIOR TO BACKFILL.

4.) NO ALLOWANCE SHALL BE MADE FOR FRICTION BETWEEN THE PIPE WALL AND THE THRUST COLLAR.

5.) DESIGN PRESSURE:_____ P.S.I.*

SCHEDULE OF DIMENSIONS AND MATERIALS *

PIPE SIZE (INCHES)	DIMENSIONS				TIE RODS REQ'D	
	A	B	C	D	DIA.	NO.

NOTE:
THRUST BLOCK AREAS TO BE COMPUTED ON BASIS OF _____ LBS. PER SQ. FT. SOIL RESTRAINT BEARING. (1,500 MIN)

SEE NOTE 5 _____ * TO BE COMPLETED BY ENGINEER.

CITY OF P.C.B.
UTILITIES DEPARTMENT

REV.	DATE
1	MAR '12

.....
DATE OF APPROVAL

WATER MAIN THRUST COLLAR DETAIL

M-6

I:\CAD\AutoCad Files\0-UTILITIES DEPARTMENT\UTILITY MAPS\DETAILS_PCB-MOST CURRENT\0-DWG\0-NEW-PCB-UTL-DETAILS-1.dwg, 6/11/2014 3:45:32 PM, 24x36monoserv.ctb