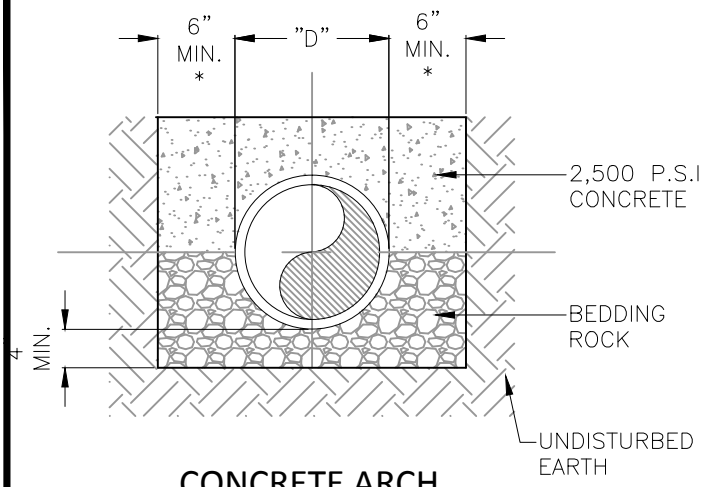

CONCRETE ARCH

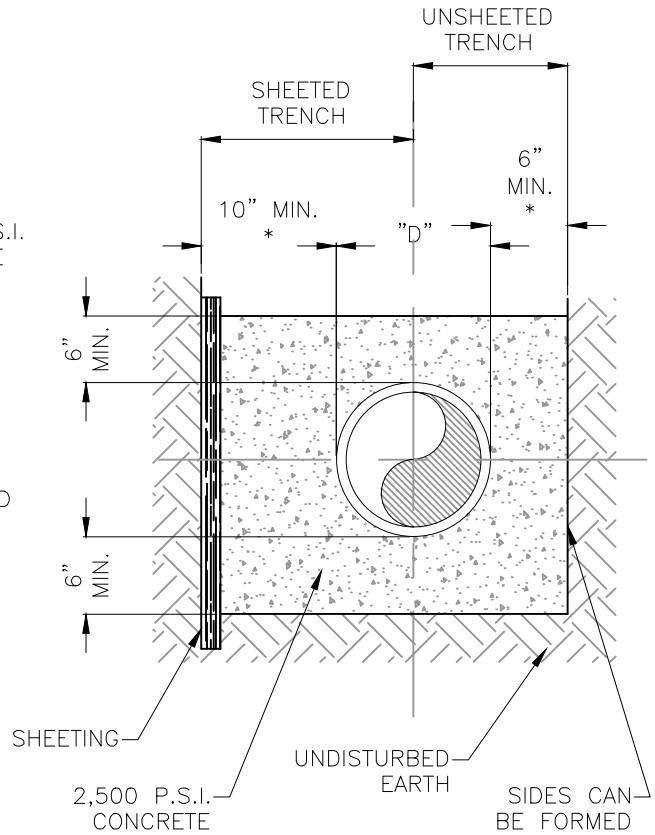

FULL ENCASEMENT

NOTES:

1.) (*): 15" MAX. FOR PIPE DIAMETER LESS THAN 24", AND 24" MAX. FOR PIPE DIA. 24" AND OVER.

2.) "D" REFERS TO THE DIAMETER OF THE PIPE.

3.) USE OF CONCRETE ARCH HALF ENCASEMENT OR FULL ENCASEMENT TO BE DETERMINED IN THE FIELD AS DIRECTED BY THE CITY.

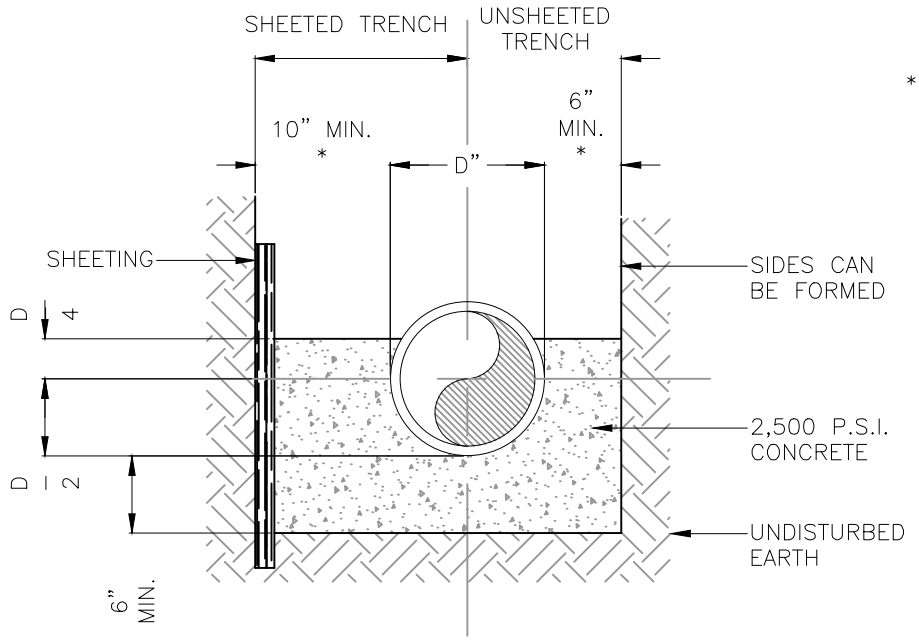

* SEE NOTE 1 (TYPICAL)

CRADLE OR HALF ENCASEMENT

CITY OF P.C.B. UTILITIES DEPARTMENT			CONCRETE ARCH & ENCASEMENT DETAIL	M-3
REV.	DATE			
1	MAR '12	..... DATE OF APPROVAL		

I:\CAD\AutoCad Files\0-UTILITIES DEPARTMENT\UTILITY MAPS\DETAILS_PCB-MOST CURRENT\0-DWG\0-NEW-PCB-UTL-DETAILS-1.dwg, 6/11/2014 2:13:39 PM, 24x36monoserv.ctb