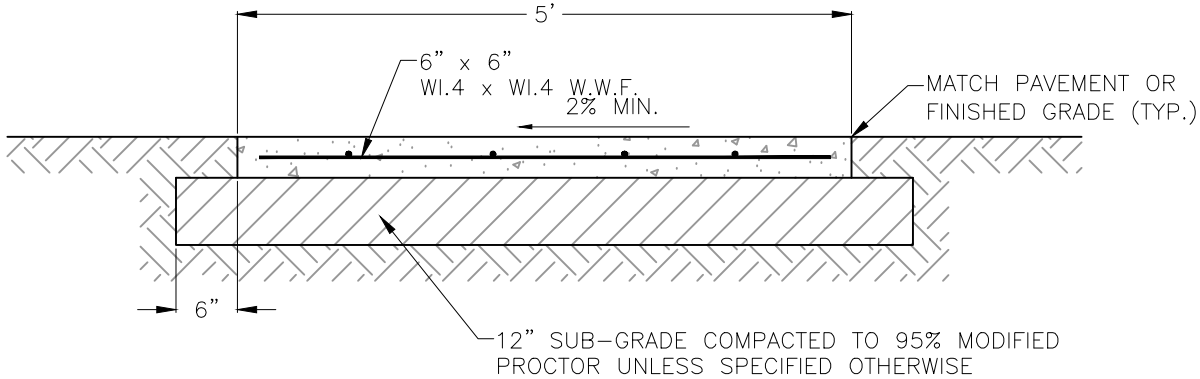

SIDEWALK CROSS SECTION

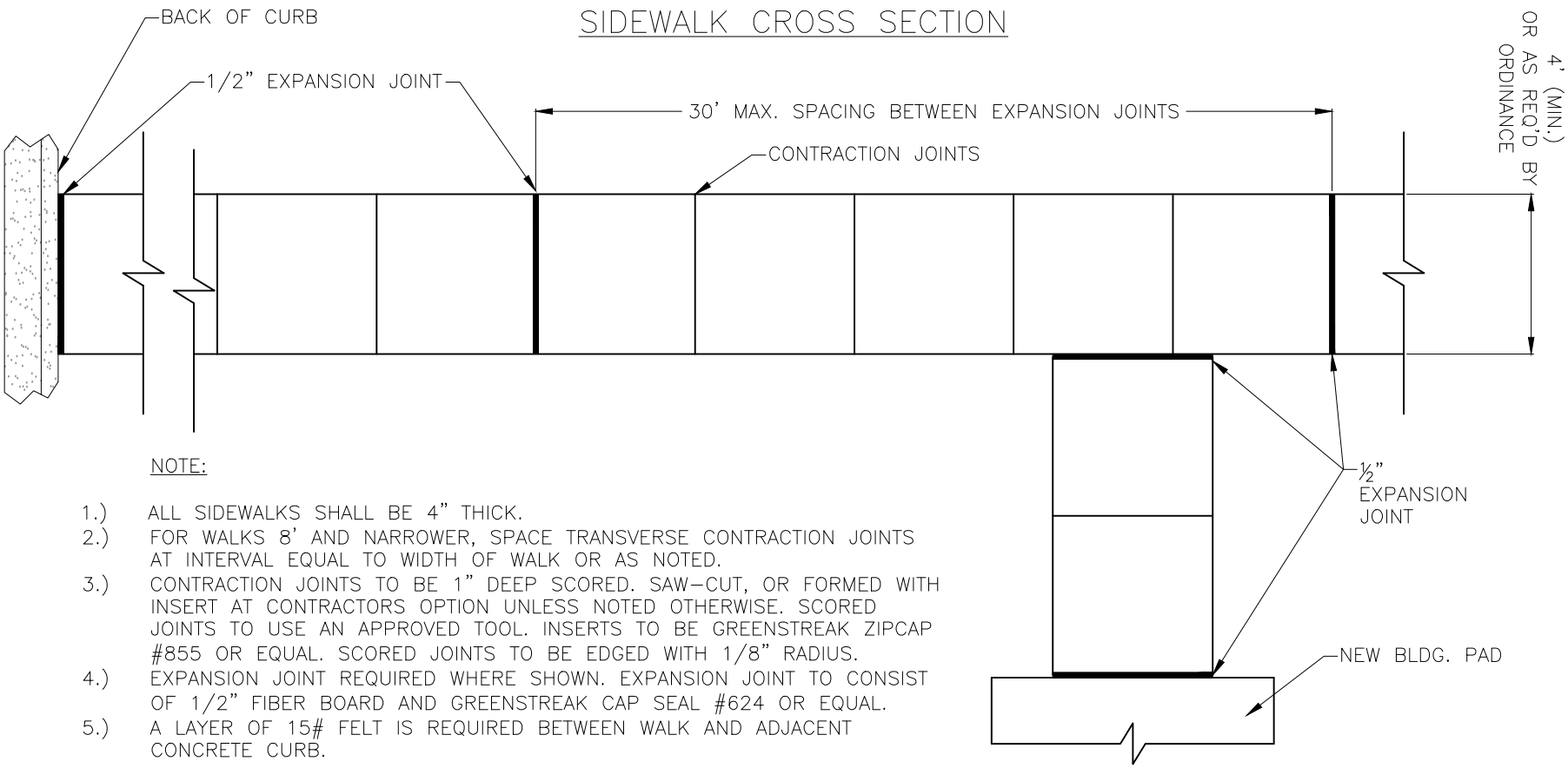

NOTE:

1.) ALL SIDEWALKS SHALL BE 4" THICK.
2.) FOR WALKS 8' AND NARROWER, SPACE TRANSVERSE CONTRACTION JOINTS AT INTERVAL EQUAL TO WIDTH OF WALK OR AS NOTED.
3.) CONTRACTION JOINTS TO BE 1" DEEP SCORED. SAW-CUT, OR FORMED WITH INSERT AT CONTRACTORS OPTION UNLESS NOTED OTHERWISE. SCORED JOINTS TO USE AN APPROVED TOOL. INSERTS TO BE GREENSTREAK ZIPCAP #855 OR EQUAL. SCORED JOINTS TO BE EDGED WITH 1/8" RADIUS.
4.) EXPANSION JOINT REQUIRED WHERE SHOWN. EXPANSION JOINT TO CONSIST OF 1/2" FIBER BOARD AND GREENSTREAK CAP SEAL #624 OR EQUAL.
5.) A LAYER OF 15# FELT IS REQUIRED BETWEEN WALK AND ADJACENT CONCRETE CURB.

CITY OF P.C.B.
UTILITIES DEPARTMENT

REV.	DATE
1	MAR '12

DATE OF APPROVAL

STANDARD JOINT LAYOUT FOR CONCRETE WALKS

M-12