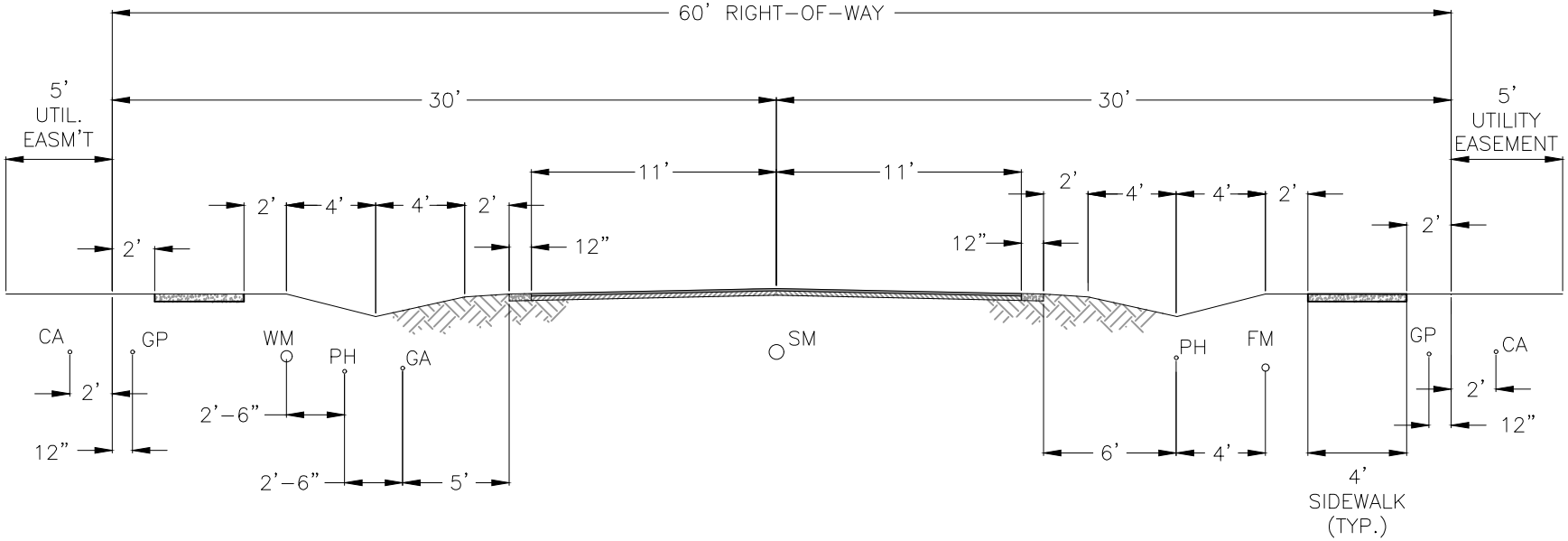

STREET SECTION

FM – FORCE MAIN
WM – WATER MAIN
SM – SEWER MAIN
GP – GULF POWER
PH – PHONE
GA – GAS
CA – CABLE

NOTE: ALL UTILITIES TO HAVE 36" MINIMUM COVER & 48" MAXIMUM COVER.

CITY OF P.C.B.
UTILITIES DEPARTMENT

REV.	DATE
1	MAR '12

DATE OF APPROVAL

TYPICAL UTILITY LOCATIONS

M-10A